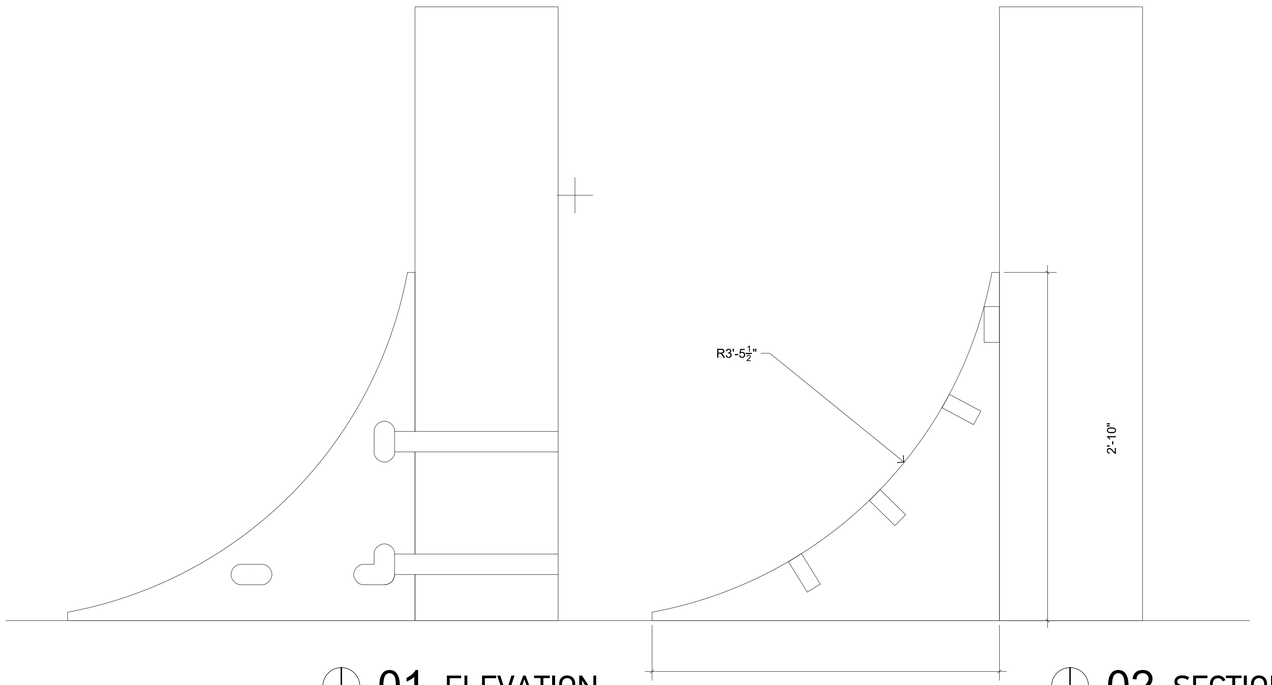

01 ELEVATION

02 SECTION

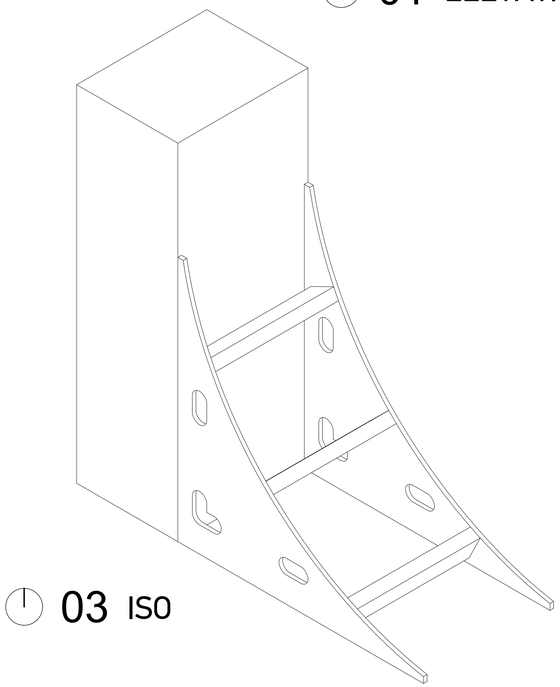

03 ISO

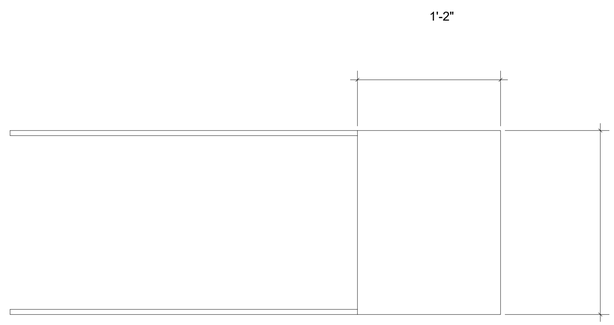

04 PLAN

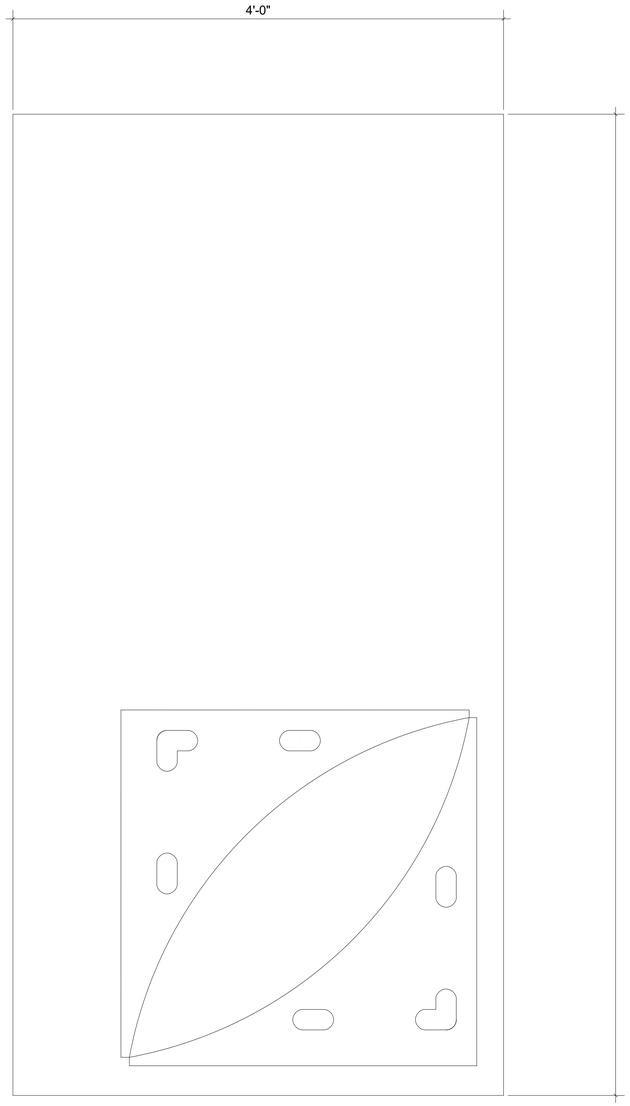

05 4x8 SHEET LAYOUT

RODRIGO GALLARDO

MIT DEPARTMENT OF ARCHITECTURE 77 MASSACHUSETTS AVE, ROOM 7-302 CAMBRIDGE, MA 02139

KINETICS OF URBAN MOVEMENT

902 COMMERCE ST, HOUSTON, TX 77002

GENERAL NOTES

FOR REVIEW

FLOOR PLANS

SHEET: A-1.01
SCALE: 3/16" = 1'-0"
DATE: 04.10.26

REV ISSUE DATE